"JR-** Dual Station Wire Harness
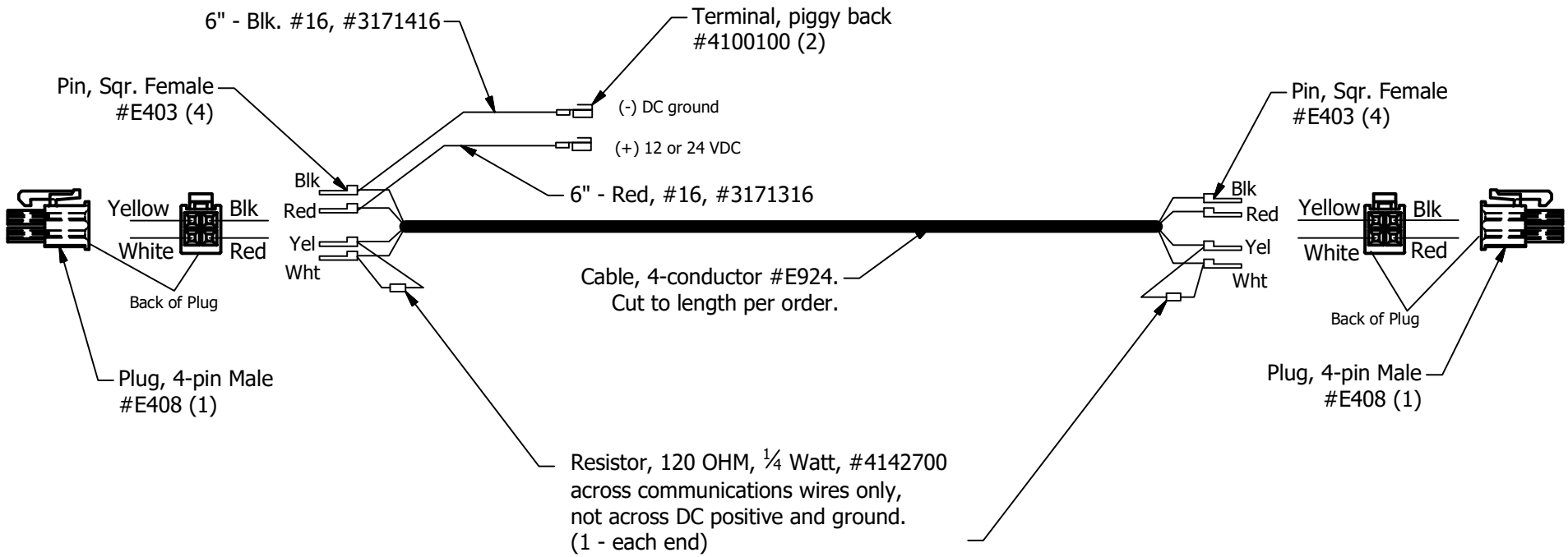
JR-, (** = Length in feet)**